Milos. Works better.

MILOS TRUSS

ORIGINAL USER MANUAL – PART 1 „GENERAL REQUIREMENTS“

NB! PART 1 is inseparable connected with the applicable user manual PART 2

May 2016

Manufacturer:
Milos s.r.o.
Špindlerova 286, 413 01 Roudnice nad Labem
Czech Republic
T +420 416 837 846
F +420 416 837 275
info@milos.cz
www.milossystems.com

Area Four Industries

Content

1. INTRODUCTION

2. SCOPE

3. IDENTIFICATION

4. LIMITATIONS OF USE

5. SAFETY INSTRUCTIONS
5.1 ELETRICAL POTENTIAL BONDING

6. TRANSPORT AND STORAGE

7. APPROVED ACCESSORIES

8. COATINGS AND SURFACE TREATMENTS

9. SLINGING METHODS

10. ASSEMBLY INSTRUCTIONS
10.1 ASSEMBLY
10.2 DISASSEMBLY
10.3 ATTACHING LOADS

11. INSPECTIONS
11.1 GENERAL
11.2 INSPECTION LEVELS
11.3 INSPECTION FREQUENCY

12. MAINTENANCE AND DISCARD CRITERIA
12.1 DISCARD AND REJECTION CRITERIA
12.2 GENERAL
12.3 MAIN CHORDS
12.4 BRACES
12.5 CONNECTORS
12.6 PINS

13. LEGISLATION

14. GUARANTEE

15. DISCLAIMER

16. ANNEX A: CE DECLARATION OF CONFORITY

17. ANNEX B: CE DECLARATION OF PERFORMANCE

1. INTRODUCTION

BEFORE installing and operating a MILOS truss, read this manual carefully and pay attention to the information provided. Use this manual to familiarise yourself with the products, its proper use and safety regulations.

DANGER

DANGER: Indicates a hazardous situation which, if not avoided, will result in death or serious injury. This signal word is to be limited to the most extreme situations.

WARNING

WARNING: Indicates a hazardous situation which, if not avoided, could result in death or serious injury.

CAUTION

CAUTION: Indicates a hazardous situation which, if not avoided, could result in minor or moderate injury.

NOTICE

NOTICE: address practices not related to personal injury.

SAFETY INSTRUCTIONS

SAFETY INSTRUCTIONS: is used for lists of steps, procedures or instructions that might otherwise substitute a DANGER, WARNING or CAUTION notification.

This manual shall be inseparably used in conjunction with a PART 2 manual and vice versa. The PART 2 manuals contain product specific requirements regarding legislation, set-up, dismantling, allowable loading and any other information not referred to in Part 1.
PART 2 is always seperseding PART 1.

SAFETY INSTRUCTIONS

Make sure manuals are available at all times for all users, employees.

For the ease of use of this manual trusses, truss element are referred to as „truss".

2. SCOPE

MILOS trusses are structural elements designed to be repeatedly assembled and disassembled in order to carry loads in temporary or permanent installations. Depending on the application MILOS trusses can be judged as lifting accessories or construction products.
If used as lifting accessories, trusses are subjected to the European Machine Directive 2006/42/EC. If trusses are used as construction products in a temporary or permanent construction they are subjected to the European Construction Regulation 305/2011/EC.
A declaration of conformity/ performance can be found in **ANNEX A** and **ANNEX B**.

NOTICE

It shall be noted that it is the sole reponsibility of the client to check with local authorities if the legislation used by MILOS is acceptable in the country of use.

3. IDENTIFICATION

Milos products can be recognised by the specific id-tag on all trusses as well as the embossed logo with unique number on each coupler (for trusses produced after 1-1- 2016). For the ease of communication truss parts have the following names.

Fig. 1.1

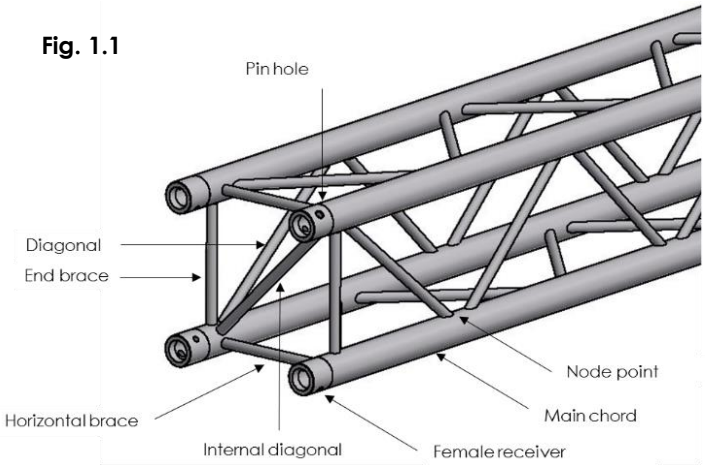

Fig. 1.2

Conical coupler

1 - Female receiver
2 - Main chord
3 - Connector
4 - Truss pin

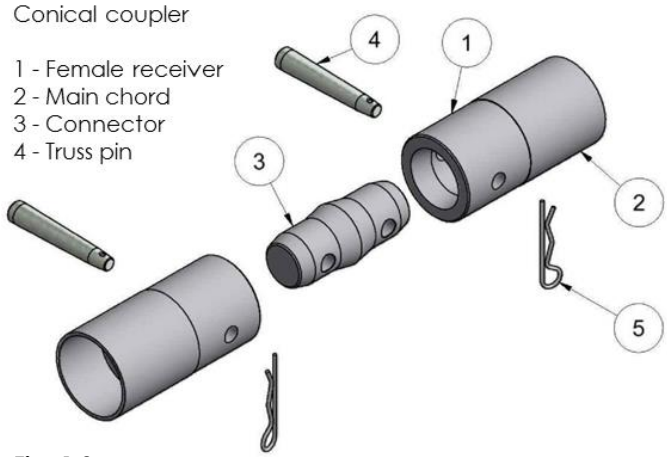

Fig. 1.3

Pin-Fork connector

1 - Main chord
2 - Pin Connector
3 - Fork Connector
4 - Truss pin

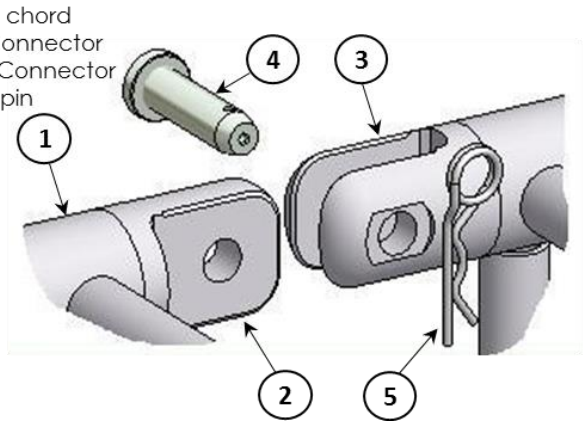

4. LIMITATION OF USE

Truss shall always be used within the limits of the structural report and the declarations provided. Loading figures mentioned are only valid for static loads.
Self-weight is already taken into account.
To meet BS, ANSI and CWA standards for truss elements in repetitive use all loadings shall be multiplied with 0.85. All other structures made of truss need dedicated structural reports.

Some products within our range fit with those of other brands. Nevertheless trusses can differ considerably depending on their design, layout and manufacture (e.g. material properties, alloy, diameter, thicknes, layout of the bracing, system tolerances, etc.) Milos provides comprehensive technical support and structural data for all trusses. The structural integrity of an assembled structure of different brands and legal compliance is the sole responsibility of the user. Their combined use must always be certified by a structural engineer on case by case basis. Milos cannot accept responsibility for products manufactured by third parties. Our design and quality assurance certifications are based on the latest European standards including EN-1999 and EN-1090 and are at least equal to other truss manufacturer specifications within the EU and US markets.

MILOS trusses described in this manual are not particularly designed for lifting people! Adequate load-reduction and safety precautions, according to local legislation, must be taken when people are lifted.

Truss can be used in environmental conditions varying from -20°C up to +80°C. However if trusses are use bellow 0°C special attention must be taken.

The open heel of the welds of some of our truss models and capillary working of pin holes can cause water intrusion inside the truss chords and diagonals.

If temperatures are bellow 0°C the captive water will freeze and cause damage to the truss members.

To avoid this effect Milos can provide the same trusses with 100% circumferential welded diagonals as well drainage holes.

Special attention shall also be taken when trusses are used in aggressive environments or its near vicinity. The aluminium alloys used might not particular suitable for this environment.
Direct contact with concrete shall be avoided by means of a sealant. A special instruction form is available.
The alloy used has good properties in Salt water environment however it can cause oxidation on the surface. Regular cleaning with fresh water or a dedicated protection is advised.
The material used for the connectors is especially vulnerable for salt water. It is advised to anodise, coat or treat it with a sealant in such a way that no salt water particles can contact the material.

All bolts and nuts used in the line of forces, shall be fastened by means of a torque wrench. When bolts are connected to threaded aluminium components the torque setting are M12 > 15Nm, M16 > 25Nm.

5. SAFETY INSTRUCTIONS

For health and safety reasons people assembling, disassembling, transporting and maintaining truss should wear adequate Personal Protection Equipment like, but not limited to, gloves, sound protection, hard heads and safety shoes.
The noise levels during assembly and disassembly can exceed 80 dB.
Elements weighting 20 kg or more shall be carried by at least 2 persons.
Artists, performers or people who have to be on the stage or in the vicinity of 50 cm shall be instructed and informed about correct use and possible dangers before use.

In case of an accident or malfunction, the trusses shall be marked, taken out of service and offered for inspection to a qualified person in order to establish their structural integrity for re-use. The trusses shall be identified accordingly and records of identification numbers and Photo's shall be kept.
Examples of Accidents or malfunction can be:

- Truss is dropped to floor from height
- Truss is lifted with missing pins in joints which might cause overloading
- Truss was subject to shock loads
- Truss was torqued during e.g. lifting.

SAFETY INSTRUCTIONS

Always wear hard heads, safety shoes, sound protection and protective gloves when moving, assembling, disassembling or transporting truss elements.

Truss data published before October 2015 was based on calculations according to the German DIN 4113 standard. While truss data published after this date are based on the Eurocode EN1999. Due to the different safety principle of both standards data such as allowable bending moment, shear force and normal force cannot be compared.

⚠ WARNING

Caution should be taken when using data of structures based on Load Resistance Factor Design (LRFD) standards, such as Eurocodes or data based on Allowable Stress Design (ASD). A structural engineer can provide help.

Trusses and structures from assembled trusses shall always be checked on their structural stability and strength by a chartered engineer. The provided technical specification shall never be exceeded.

⚠ WARNING

Do not mix structural data from different standards without knowing their respective safety principle.

⚠ WARNING

Do not use of damaged or malfunctioning parts.

5.1 ELECTRICAL POTENTIAL BONDING

The user needs to ensure that truss systems that might develop dangerous touch voltages in the event of an electrical fault are incorporated into a common potential equalisation system. This applies to all

elements made of electro conductive material which have equipment placed on or attached to them or across which wires and cables run that, in the event of damage, could make electrical contact with metal parts. The connections can be made with clips, pipe clamps, screw joints or special single-pole locking connectors.

The common potential equalisation system must be connected to the earth wire of the electrical power supply system. For cable lengths of up to 50 metres, 16 mm^2 Cu is considered the standard value for an adequate cross-section. For cable lengths of up to 100 metres, the standard value is 25 mm^2 Cu. In truss tower systems, the potential equalisation connection can be made by means of a potential equalisation connection point provided by the manufacturer at the tower base. Since the wheels or rollers used in tower systems with „sleeve blocks" insulate the movable part of the truss construction, the latter must be provided with a separate potential equalisation connection.

SAFETY INSTRUCTIONS

Grounding trusses is extremely important as very often audience and installers will come in direct contact while the fixtures suspended are electrically charged.

6. TRANSPORT AND STORAGE

⚠ CAUTION

Always wear hard heads, safety shoes, sound protection and protective gloves when moving, assembling, disassembling or transporting truss elements.

Treat the truss with care. Don't drop them, don't drag them around and don't throw sections on top of each other.
Prevent damage from sharp edges such as the forks of a forklift.
Dedicated dollies can be highly effective means for transportation and storage, while providing the truss elements - sections with some extra protection.
Vertical transportation or stocking of truss can be hazardous for reasons of falling.
Avoid physical contact with unprotected steel at all times.
Make sure truss cannot move and shake during transport. Due to the softness of aluminium the abrasive working of moving or shaking can lead to severe damage.

7. APPROVED ACCESSORIES

For a complete overview of approved accessories we refer to our brochures or **www.milossystems.com**.
It is of great importance that accessories never damage the truss element at any circumstance.

Special attention shall be taken at using clamps and hooks. It might very well be that their inside radius does not meet the tube it need to be connected to. This can lead to severe damage.

8. COATINGS AND SURFACE TREATMENTS

Coatings and surface finishes shall only be applied after consultation with the coating or finish manufacturer or other party qualified to evaluate the possible effects of the coating or surface finish on the structural properties and load - bearing capabilities of the truss.
The application of powder coating shall use only a low cure process.

Records shall be kept detailing the application of any coating or surface finish with particular attention to processes requiring the application of heat.

Chemical removal of coatings and surface finishes shall be carried out only after consulting with the chemical manufacturer to ensure that the chemical will not affect the mechanical properties of the aluminium.

Abrasion-blasting shall not be used on aluminium less than or equal to 3 mm thick.

9. SLINGING METHODS

There are many ways of slinging a truss. At all times strength and stability must be guaranteed. However the correct way depends on many things and the application.
Based on loading a truss to its maximum, it is advised to sling trusses as per instruction given. These methods:
- Guarantee strength when attached in the node or directly nex to the end brace
- Guarantee that the hanging point is above the truss centre of gravity
- Give redundancy in case one sling fails
- Minimise the horizontal compression of main chords by choosing correct slinging positions and steep bridle angles

⚠ WARNING

Slinging shall be applied solely at the main chords, not at the couplers or internal braces.

⚠ WARNING

Slinging shall be applied at node points, aside end braces or aside horizontal cross braces.

NOTICE

Slinging equipment shall be made from non-abrasive and fire retardant materials.

The use of slinging devices with a soft cover is advised. Direct contact between a steel wire rope and the truss chord should be avoided because of the abrasive surface of the steel wire rope.

For stability reasons it is advised to wrap at least 2 main chords.

Trusses can be suspended from either the top or bottom chords. The best method depends on the application.

NOTICE

Suspending or supporting has the same effect on a truss.

If the truss is not supported in the node point the main chords will be subject to an additional local bending moment. This effect shall be considered in the structural analysis and could lead to reduction of the load capacity.

For a simply supported span at both ends this might be less a problem as the bending moment at the ends are almost zero.
In a multiple supported truss, main chords at mid span supports are subject to bending moment and shear at the same time.
For optimum performance, suspensions shall be attached into the node points. If not, the truss might be subject to a substantial reduction of its load capacity. Slinging to all main chords doesn't change this. The correct load can only be determined by studying each load case individually. This should be done by a chartered engineer.

ADVICED SLINGING METHODS

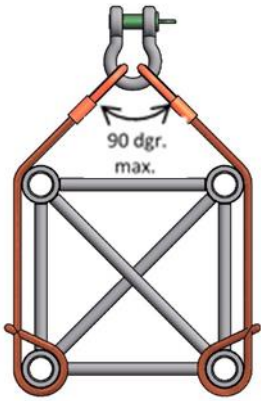

Fig. 7.1

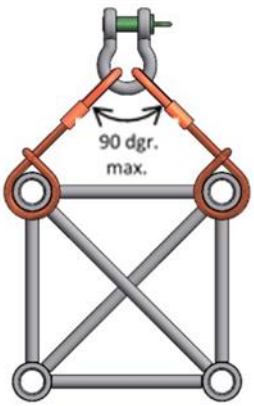

Fig. 7.2

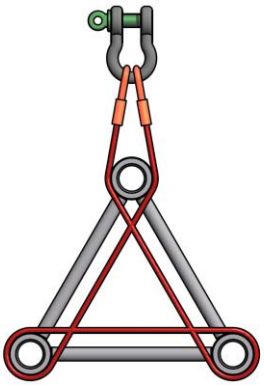

Fig. 7.3

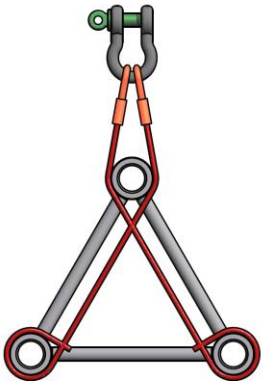

Fig. 7.4

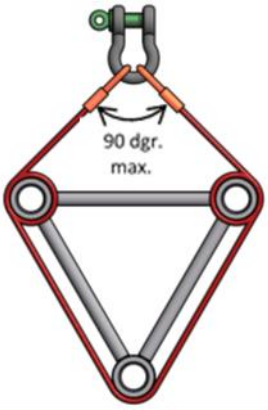

Fig. 7.5

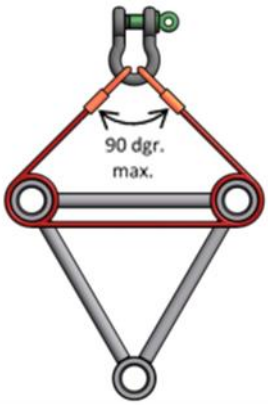

Fig. 7.6

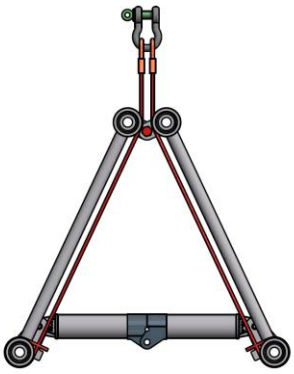

Fig. 7.7

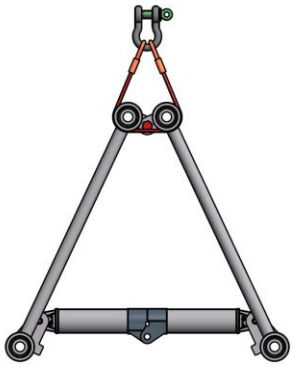

Fig. 7.8 Only in combination with corner / sleeve blocks

Fig. 7.7 NB! Ladder pick up only on top chord

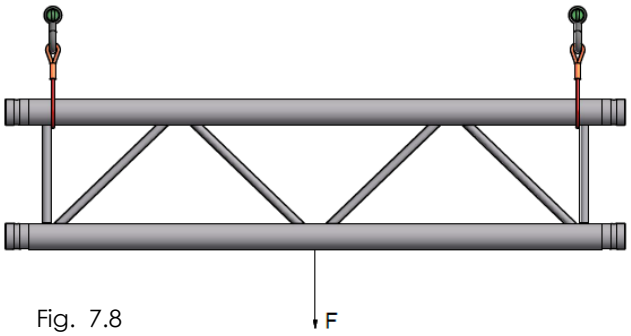

Fig. 7.8

⚠ CAUTION

Duo trusses/ ladder truss/ two chord truss need very special attention for slinging. Stabilisation of the top chord is vital for the load capacity. Only the bottom chord shall be loaded. Other load applications need structural analysis before use.

10. ASSEMBLY & DISSASSEMBLY INSTRUCTIONS

At all times trusses and truss constructions shall be assembled by a competent person or sufficiently instructed personnel under supervision of a Competent person. Before assembly, use and disassembly the competent person is responsible for, but not limited to:

- follow up of all instructions as stated in this manual and the applicable Part 2.
- instruction to those assembling the trusses and correct suspension of trusses and loads.

It is advised to show physically how to assemble and disassemble trusses, how to orientate couplers, which tools to use.

Trusses with conical coupler only allow the pin to be placed from the outside inwards.
Make sure that the conical hole in the connector is correctly placed. Meaning the larger side of the hole need to face outwards. See photo.

Fig. 8.1

Fig. 8.2

When two trusses with conical connector are assembled a gap between them can be seen. This is done on purpose and has no negative influence on strength and function. See photo.

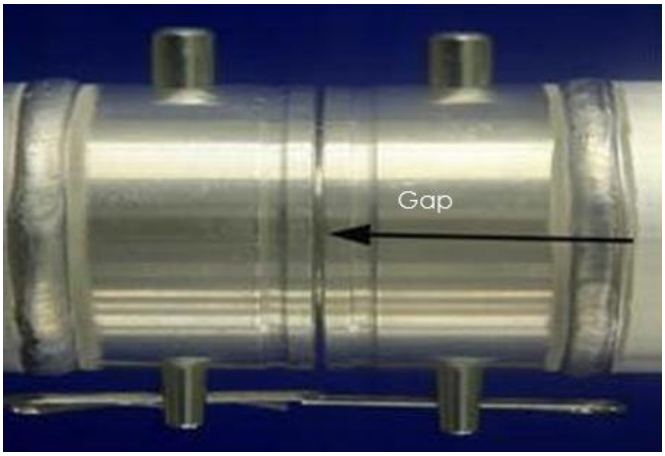

Fig. 8.3

All bolts and nuts used in the line of forces, shall be fastened by means of a torque wrench. When bolts are connected with threaded aluminium components the torque settings are M12 > 15Nm, M16 > 25Nm.

A competent person shall check prior to use if all trusses are connected properly before applying loads.

For trusses with end braces it does not matter if the diagonals follow the alternating zig-zag pattern.

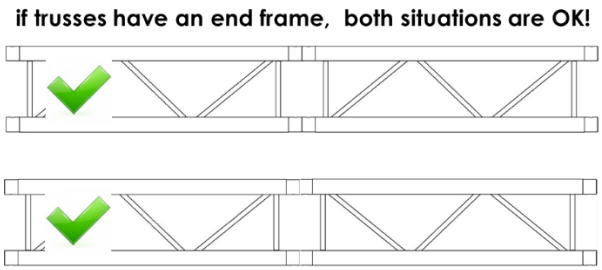

Fig. 8.4

10.1 ASSEMBLY

1. Slide two elements towards each other.
2. Look if the pin holes are more or less aligned. NB! With conical truss there is always a small difference in alignment. This is done on purpose in order to maintain the functionality of the conical connection system.
3. Guide the truss by its end in case the holes do not align. Never use brute force.
4. Drive the pin through the pin holes preferably by using a red-copper hammer. Rubber/ plastic hammers do not work properly as they absorb to much energy.

Tip! Place the pin in such a way that the hole for the R-clip is perpendicular to the length of the truss. This allows easy mounting of the R-clip.

5. Put the R-clip in place.
6. Sling the truss by means of appropriate methods described.
7. Before loading, check if all connections are made.
8. Attach loads as per instruction given in chapter 8.3
9. Lift the truss 1meter and check all connections. Correct where.
10. Lift the truss to trim height. Avoid „bumping“ during the lifting operation as it will lead to an increase of forces in the truss and load.

10.2 DISASSEMBLY

1. Lower the truss till working height.
2. Detach the loads.
3. Inspect the truss for any default. Mark them accordingly and take them out of service.
4. Lower the truss till floor level.
5. Detach the slings or lifting accessories.
6. Remove the R-clips.
7. Drive the pins out by means of a firm hit.
8. Check components on any default. Mark them accordingly and take them out of service.

10.3 ATTACHING LOADS

Make sure:
Loads to be equally divided over both bottom or top chords. Loading a truss on one side lead to internal torsional forces which are not considered in the data provided.

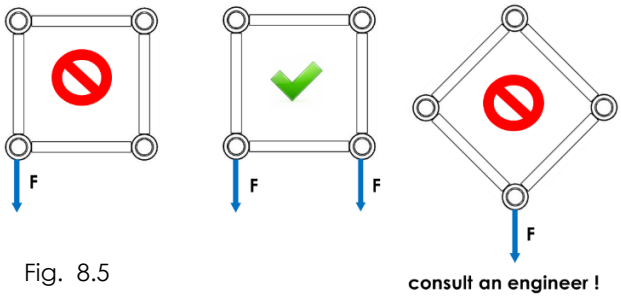

Fig. 8.5

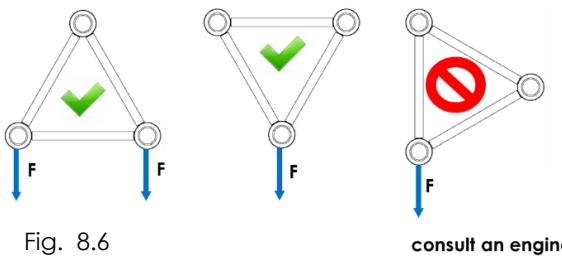

Fig. 8.6

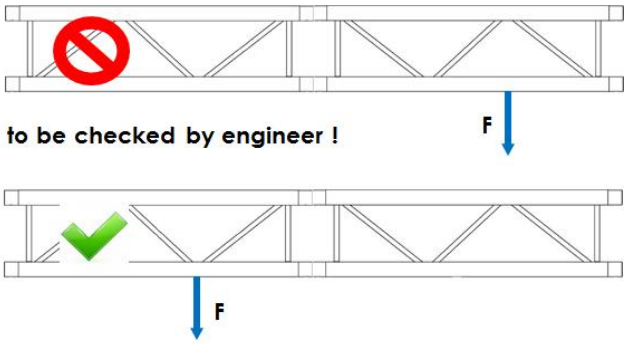

Fig. 8.7

Attaching loads near the coupler shall be done as shown below.

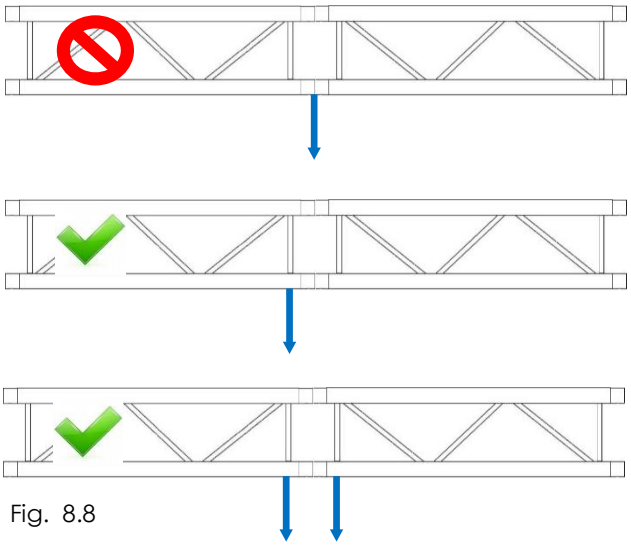

Fig. 8.8

11. INSPECTION

MILOS encourages careful documented inspection by a competent person at least once a year or as often if the circumstances or intensity of use requires so.
If the truss is used as lifting equipment, the inspection interval should be according to the machine directive (EC 2006/42) and local legislation or as often as needed
If the structural element are used as permanent load bearing element in permanent buildings they are subject to the EU Construction Product Regulation 305/2011/EC.
The inspection interval should be according to the building code and local legislation or as often as needed.

⚠ WARNING

MILOS truss shall be checked and inspected visually for damage or any other aspect, that might negatively affect the safety, prior to each time of use.

11.1 GENERAL

Responsibility and liability for the safe use of truss elements, lies predominantly with the user itself.

The open heel in the bracing welds in the 290 and 390 series are part of the design and TÜV approved.

Inspect the truss elements, rigging wear and accessories on visual wear or damage of any kind before assembling or using the truss at any time! For inspection criteria see Table 1.

⚠ WARNING

Do not use damaged trusses, couplers and pins.

11.2 INSPECTION LEVELS

INITIAL INSPECTIONS

When first acquired, whether they are new or used, structural element should be inspected in accordance with Table 1, and a record of the inspection maintained.

REGULAR INSPECTIONS

Regular visual inspections should be carried out in accordance with Table 1. Regular inspections should be performed by a competent person and should be carried out prior to each incident of use.

PERIODIC INSPECTIONS

Periodic visual inspections should be carried out in accordance with Table 1 and a record of the inspections maintained. Periodic inspections should be performed by a competent person and should be conducted at least once each year or in accordance with an inspection routine established by a qualified person.

Truss which are subject to any accident must be inspected according to the requirements per periodic inspection and in accordance with table 1.

11.3 INSPECTION FREQUENCY

TRUSS IN REGULAR SERVICE

Truss in regular service should be subjected to regular and periodic inspections.

PERMANENT INSTALLATIONS, STATIONARY

Periodic inspections should be carried out on all truss that are permanently installed in a stationary (not moving) configuration. The frequency of inspections should be determined on the basis of the prevalent conditions.

PERMANENT INSTALLATIONS, MOVING

Periodic inspections should be carried out every three months, or in accordance with an inspection routine established by a qualified person, on all truss that are installed in a permanent configuration where movement of the truss system is an integral part of use.

RECORDS

Records of initial inspections and periodic inspections should be kept by the owner for each truss and should be signed and dated by the person carrying out the inspections.

Fig. 9.1 Table 1	Inspection level			Items to be inspected						
Part	Initial	Regular	Periodic	Chords	Diagonals	Connectors	Welds	Fasteners	Geometry	ID-TAG
	Chapter 11.2	Chapter 11.2	Chapter 11.2							
Missing parts										√
Dents	√	√	√	√	√					
Bends	√	√	√	√	√					
Holes (1)	√	√	√	√	√	√	√	√		
Incorrect repair	√	√	√	√	√	√	√	√		
Abrasion	√	√	√	√	√		√			
Corrosion			√		√		√			
Missing members	√	√	√	√	√	√		√		
Flatness (2)	√	√	√			√				
Deformation	√	√	√			√		√		
Excessive wear	√	√	√			√	√	√		
Cracks	√	√	√				√			
Correct grading (3)	√	√	√					√		
Twisting	√	√	√						√	
Squareness	√	√	√						√	
Bending	√	√	√						√	
Sweep			√						√	
Camber			√						√	

(1) not to be part of the construction; **(2)** particular for trusses with connecting plates; **(3)** Minimum 8.8 grade

12. MAINTENACE AND DISCARD CRITERIA INTRODUCTION

Apart from the normal requirements with regard due to care in utilization, professional assembly, dismantling, transport and storage of truss elements, regular inspections are vital. A careful visual check of the individual elements before each use, independent of the respective field of utilization, shall be performed. Regular inspections of the truss should be carried out at least once a year by a competent person and documented in written form. If the truss is used intensively, regular inspections should be performed at shorter intervals. If deficiencies are noted during an inspection of the truss that preclude further safe use, the truss must be taken out of service and scrapped. Identification of the deficiency cannot be considered sufficient in most cases. Disposal via the manufacturer/supplier or a metal recycling company is the only safe way of protecting others from risks generated by defective material.
The discard criteria provided by shall be incorporated fully into the inspection.

Due to fabrication the truss can have some dimensional deviation from the theoretical dimensions given. These deviations are within limits as given in EN 1090-3.

12.1 DISCARD AND REJECTION CRITERIA

Trusses are considered to be rejected form service if they display one or more of the criteria mentioned in this manual.

⚠ WARNING

In case of doubt the manufacturer/ supplier or an expert should be asked for their opinion.

12.2 GENERAL

Although aluminium may not develop corrosion the way many steel alloys do ambient influences can impact on aluminium corrosively.
Care should be taken with trusses that are placed outdoors for a long time, in particular in areas with a high level of industrial pollution, near salt water, near tram lines, near swimming pools. Trusses should be checked individually before each use as to whether the expected pollution has had a corrosive effect.

⚠ WARNING

If any part of a truss shows significant visible damage or is suspected of containing a damaged element (visible or not), the truss should be taken out of service and marked accordingly. A qualified person should carry out an assessment of the truss elements.

- Repairs should be carried out and warranted by either the manufacturer or a suitably qualified person to be approved by the manufacturer.
- Regularly smooth the surface of coupling parts. Use a fine sandpaper or conventional abrasive materials
- Keep them slightly lubricated with oil, silicone spray or similar lubrication. Any lubricant used should not be "sticky", thus preventing the gathering of dirt, dust or small parts of debris.
- Prevent painting the inner surface of the connector and pin holes. This has a negative effect on the fit.
- Remove any kind of debris from truss and its components. Do not use any abrasive methods other than abrasive cloth or sandpaper grain 240 or higher.
- Welds which have cracks or other irregularities. The incomplete welding seams around the diagonal braces are production - related and their stability has been approved (TÜV approved).

- Missing identification stickers (name of the manufacturer, truss type and date of production).
- Lasting (3D) deformation of the truss by rotation, bending or torsion or other deformation with resultant deviation from the original shape.
- Reduction of the raised level of the welding seam by mechanical wear by more than 10%.
- Excessive corrosion whereby the total cross-sectional area of the truss is reduced by more than 10%.

⚠ WARNING

Damaged or worn material shall be clearly marked and immediate taken out of service.

12.3 MAIN CHORDS

If one or more of the main extrusions breaks or shows cracks, or if one or more of the main extrusions is rolled by more than 10% of their respective diameter from the original centre line then the truss is unfit for further use. The same applies if the ends of the main chord of a truss are rolled in the area around connector, connecting the truss to another element only possible by exerting considerable force.

Further signs of a discard condition are:

- Scratches, cuts or signs of attrition on the surface of the main extrusions that reduce the cross-sectional area of the tube by more than 10%.
- Indentations in the main tube to a depth of more than 1mm and a length of more than 10mm, irrespective in which direction.
- Holes which appear after the truss is brought into use.
- The remaining (plastic) deformation of the main chord to an oval shape or indentation of the tube by more than 10%.

12.4 BRACES

If one or more diagonal braces, end braces or cross braces are broken or no longer exists, the truss is not usable. The same applies for laterally displaced braces ter from the centre line. Further signs of a discard condition are:

- Scratches, cuts or signs of wear on the surface of the braces that reduce the cross-sectional area of the braces by more than 10%.
- Indentations in the braces to a depth of more than 0,5 mm and a length of more than 10 mm, irrespective in which direction.
- Holes which appear after the truss is brought into use.
- The remaining (plastic) deformation of a brace to an oval shape or indentation of the brace tube by more than 10%.
-

12.5 CONNECTORS

Signs of a discard condition are:

- Cracked or partially broken welding seams between the main tube and the connector.
- Oval signs of wear in the drill holes greater than 10% of their respective diameter.
- Rotational displacement for the drill holes for the bolt holes in a connector or between two adjoining connectors by more than 2°.
- Deflection of the main chord ends with connector by more than 5° which makes connecting two truss elements during assembly more difficult.
- Signs of wear on the connector or the connector that reduce the cross-sectional area by more than 10%.
- Deformation or distortion in the main chord area next to the welds of the connector.
- Overloading by excessive force causes buckling.
- Overloading through excessive tensile force can cause diminution of the main tube next to the welds.
- Each scratch, cut or hammer stroke indentation on the connector to a depth of more than 2 mm and that is longer than 10 mm, independent of the direction.
- Excessive corrosion in the connector.

For systems that have remained assembled for more than one year indoors or for 2 months outdoors, new, galvanized bolts should be used or stainless steel versions in order to prevent possible dangers by galvanic corrosion.

12.6 PINS

Pins undergo wear when inserted and removed frequently, in particular by hammer strokes. They can be regarded as consumer goods.
Pressure areas and deformations in the bolts are indications of a massive overload. If a bolt shows such a change, it may not be used any longer.
Further signs of a discard condition:

- Cuts, indentations, scratches and other damages on the smooth surface of the pin.
- Burrs, mushroom heads and other protruding, sharp or pointed edges at the narrower end of the pin.
- Deformation through hammering which causes wear on the cross-hole or damage to a screw thread.
- Attrition of the zinc coating on any part of the bolt, causing this to corrode.
- No self-locking nuts may be used if the nylon safety mechanism is clearly damaged by wear.

⚠ WARNING

NEVER RE-ZINC PLATE STEEL PINS AS THEY ARE MADE OF HIGH GRADE STEEL. HYDROGYNE EMBRITTLEMENT MIGHT OCCUR.

13. LEGISLATION

For fabrication and use the following standards are applicable.

	MANUFACTURING
EN 1990	Eurocode 0 Basis of structural design
EN 1991 all parts	Eurocode 1 Actions on structures
EN 1993 all parts	Eurocode 3 Design of steel structures
EN 1999 all parts	Eurocode 9 Design of Aluminium structures
EN 1090-1	Execution of steel and aluminium structures-part 1: Requirements for conformity assessment of structural components

EN 1090-3	Execution of steel and aluminium structures-part 3: technical requirements for aluminium structures
ANSI E1.2-2006	Entertainment Technology: Design, Manufacture and Use of Aluminium Trusses and Towers
CWA 15902-2	Lifting and Load-bearing Equipment for Stages and other Production Areas within the Entertainment Industry-Part 2: Specifications for design, manufacture and for use of aluminium and steel trusses and towers
BS 7905-2	Specification for design and manufacture of aluminium and steel trusses and towers
EN 30042:1994	Arc welded joints in aluminium and its weldable alloys - Guidance on quality levels for imperfections.
EN ISO 3834-1 & 3	Quality requirements for welding - Fusion welding of metallic materials - Part 1: Guidelines for selection and use Part 3: Standard quality requirements
EN 754 (all parts)	Aluminium and aluminium alloys - Cold drawn rod/bar and tube
EN 755 (all parts)	Aluminium and aluminium alloys - Extruded rod/bar, tube and profiles
EN 515:1993	Aluminium and aluminium alloys - Wrought products - Temper designations
EN 573 (all parts)	Aluminium and aluminium alloys - Chemical composition and form of wrought products
EN 10204:2004	Metallic products - Types of inspection documents
2006/42/EC	European Machine Directive
305/2011/EC	European Construction Product Directive
	USE
BS 7906-2	Code of practice for use of aluminium and steel trusses and towers / England
LOLER	Safe use of lifting equipment, lifting operations and lifting equipment regulations / England
DGUV 17/ BGVc1	Staging and Production Facilities for the Entertainment Industry/ Germany
IGVW SQP1	Code of practice for event technology-Provision and Use of Truss Systems/ Germany
BS 7906-2	Code of practice for event technology-Provision and Use of Truss Systems/ Germany

14. GUARANTEE

1. For a period of 24 month we undertake to repair, free of charge any damage attributable to faulty materials or workmanship, provided that the appliance is forwarded, freight paid, to our works or one of the Milos contract service organisations.
2. Extended warranty can be obtained by registering your products at **www.milossystems.com**
3. The guarantee - period begins with the day of the delivery, proven by a purchase receipt like an invoice or delivery note or their copies.
4. The guarantee only is applicable for new equipment.
5. The guarantee does not cover damage due to transport damage, negligent handling, overload or parts subject to normal wear and tear. Nor damages that originate from a case of misuse because of non-observance the instructions in this manual.
6. The fitting of replacement parts not supplied by us or modifications of our design by third parties also invalidates the guarantee.
7. Guarantee repairs do not renew nor extend the guarantee-period.

15. DISCLAIMER

Milos has made every effort to ensure the accuracy of this manual, no liability will be accepted for errors. Milos reserves the right to change or alter their products or manuals without prior notice.
No part of this manual may be reproduced in any form or by any means without prior written permission.

In case of a claim under the guarantee, a malfunction or spare part requirements please contact your point of sale or Milos.

16. ANNEX A: CE DECLARATION OF CONFORMITY

Milos. Works better.

EC-DECLARATION OF CONFORMITY FOR MACHINERY
(Directive 2006/42/EEC Annex I)

MILOS s.r.o.
Spindlerova 286
413 01 Roudnice nad Labem
Czech Republic

Herewith declares that:

MILOS TRUSS MODELS; M222-BTM, M222-STM, M222-QTM, M290B-BTB/BTF, M290B-STB/STF, M290B-QTB/QTF, M290V-BTV, M290V-STV, M290V-QTV, M290U-BTU, M290U-STU, M290U-QTU/QTUU, QTVU/QTVUU, M390L-BTL, M390L-STL, M390L-QTL, M390K-BTK, M390K-STK, M390K-QTK, M400-RTO, M400-QTO, M520-QTP, M520-FTP, M950-RTT/48, M950-RTT, M950-FTT, 4GS-35, 4GS-50, 4GS-62, 4GS-62F, 4GX-91
AND TOWER MODELS MT-05, MT-1, MT2 AND MT3;

- are in compliance with the Machinery Directive 2006/42/EEC annex I
- the following harmonized standards have been applied (or parts/clauses of):
  DIN EN 1993-1, DIN EN 1999-1, DIN EN 1999-1/A2, EN 1090-1, EN 1090-3, EN 12020-1/2, EN ISO 3834-3, EN ISO 12100-1, EN 754, EN 755, EN 515, EN 573, EN 10204:2004
- the following national technical standards and specifications have been used (or parts/clauses of): DGUV-c1, BS 7905-2, CWA 15902-2,

Roudnice nad Ladem, Czech Republic, 25-05-16

Mr. F. Zykan

CEO

Milos. Works better.

EG-KONFORMITÄTSERKLÄRUNG FÜR MASCHINEN
(EG-Richtlinie 2006/42/EG, Anhang I)

MILOS s.r.o.
Spindlerova 286
413 01 Roudnice nad Labem
Czech Republic

erklärt hiermit daß:

MILOS TRUSS MODELLEN; M222-BTM, M222-STM, M222-QTM, M290B-BTB/BTF, M290B-STB/STF, M290B-QTB/QTF, M290V-BTV, M290V-STV, M290V-QTV, M290U-BTU, M290U-STU, M290U-QTU/QTUU, QTVU/QTVUU, M390L-BTL, M390L-STL, M390L-QTL, M390K-BTK, M390K-STK, M390K-QTK, M400-RTO, M400-QTO, M520-QTP, M520-FTP, M950-RTT/48, M950-RTT, M950-FTT, 4GS-35, 4GS-50, 4GS-62, 4GS-62F, 4GX-91;
UND TOWER MODELLEN MT-05, MT-1, MT2 AND MT3;

- Konform sind mit den einschlägigen Bestimmungen der EG-Maschinenrichtlinie 2006/42/EG, Anhang I
- Folgende harmonisierten Normen zur Anwendung gelangten (oder Teile/Klauseln hieraus):
  DIN EN 1993-1, DIN EN 1999-1, DIN EN 1999-1/A2, EN 1090-1, EN 1090-3, EN 12020-1/2, EN ISO 3834-3, EN ISO 12100-1, EN 754, EN 755, EN 515, EN 573, EN 10204:2004
- Folgende nationale technische Normen und Spezifikationen zur Anwendung gelangten (oder Teile/Klauseln hieraus): DGUV-c1, BS 7905-2, CWA 15902-2,

Roudnice nad Ladem, Czech Republic, 25-05-2016

Mr. F. Zykan

CEO

Milos. Works better.

DICHIARAZIONE DI CONFORMITÀ CE PER LE MACCHINE
(Direttiva 2006/42/EEC)

MILOS s.r.o.
Spindlerova 286
413 01 Roudnice nad Labem
Czech Republic

dichiariamo che:

MILOS TRUSS MODELS; M222-BTM, M222-STM, M222-QTM, M290B-BTB/BTF, M290B-STB/STF, M290B-QTB/QTF, M290V-BTV, M290V-STV, M290V-QTV, M290U-BTU, M290U-STU, M290U-QTU/QTUU, QTVU/QTVUU, M390L-BTL, M390L-STL, M390L-QTL, M390K-BTK, M390K-STK, M390K-QTK, M400-RTO, M400-QTO, M520-QTP, M520-FTP, M950-RTT/48, M950-RTT, M950-FTT, 4GS-35, 4GS-50, 4GS-62, 4GS-62F, 4GX-91
E TOWER MODELLO MT-05, MT-1, MT2 AND MT3;

- è in conformità alla Direttiva-CE Macchine 2006/42/EEC annex 1
- è in conformità con norme europee di normalizzazione (o parti di):
  DIN EN 1993-1, DIN EN 1999-1, DIN EN 1999-1/A2, EN 1090-1, EN 1090-3, EN 12020-1/2, EN ISO 3834-3, EN ISO 12100-1, EN 754, EN 755, EN 515, EN 573, EN 10204:2004
- è in conformità con norme tecniche e certificazione nazionali o internazionali (o parti di):
  DGUV-c1, BS 7905-2, CWA 15902-2,

Roudnice nad Ladem, Czech Republic, 25-05-16

Mr. F. Zykan

CEO

Milos. Works better.

DÉCLARATION CE DE CONFORMITÉ POUR LES MACHINES
(2006/42/EG Annexe)

MILOS s.r.o.
Spindlerova 286
413 01 Roudnice nad Labem
Czech Republic

déclare que:

MILOS TRUSS MODELS; M222-BTM, M222-STM, M222-QTM, M290B-BTB/BTF, M290B-STB/STF, M290B-QTB/QTF, M290V-BTV, M290V-STV, M290V-QTV, M290U-BTU, M290U-STU, M290U-QTU/QTUU, QTVU/QTVUU, M390L-BTL, M390L-STL, M390L-QTL, M390K-BTK, M390K-STK, M390K-QTK, M400-RTO, M400-QTO, M520-QTP, M520-FTP, M950-RTT/48, M950-RTT, M950-FTT, 4GS-35, 4GS-50, 4GS-62, 4GS-62F, 4GX-91
EST TOWER MODELLE MT-05, MT-1, MT2 AND MT3;

- est en conformité avec la Directive pour les machines 2006/42/EG annexe I
- est en conformité avec les normes Européennes harmonisées (parties/paragraphes de):
  DIN EN 1993-1, DIN EN 1999-1, DIN EN 1999-1/A2, EN 1090-1, EN 1090-3, EN 12020-1/2, EN ISO 3834-3, EN ISO 12100-1, EN 754, EN 755, EN 515, EN 573, EN 10204:2004
- est en conformité avec les normes et spécifications techniques nationales et internationales (parties/paragraphes de): DGUV-c1, BS 7905-2, CWA 15902-2,

Roudnice nad Ladem, Czech Republic, 25-05-16

Mr. F. Zykan

CEO

17. ANNEX B: CE DECLARATION OF PERFORMANCE

Prohlášení o vlastnostech / Leistungserklärung /Declaration of Performance

Ref.-Nr.: 1/2014

1 **M290, M390, M400, M520, M950, 4GS-35, 4GS-50, 4GS-62, 4GX-91, K-40**

2 **Příhradová konstrukce/Truss/Traverse - EN 1090-3**

3 **MILOS structural systems s.r.o.**
Špindlerova třída 286
CZ – 413 01 Roudnice nad Labem

Systém 2+

Oznámený subjekt TÜV NORD Systems GmbH & Co. KG – 0045 – provedl počáteční inspekci ve výrobním závodě a vlastního řízení výroby (a rovněž průběžný dozor, posouzení a hodnocení vlastní podnikové kontroly) podle systému 2+ a vydal Osvědčení o shodě řízení výroby.

Die notifizierte Stelle TÜV NORD Systems Gmbh & Co. KG – 0045 – hat die Erstprüfung des Werkes und der werkseigenen Produktionskontrolle (sowie die laufende Überwachung, Beurteilung und Bewertung der werkseigenen Produktionskontrolle) nach dem System 2+ vorgenommen und die Bescheinigung über die Konformität der werkseigenen Produktionskontrolle ausgestellt.

The Notified Body TÜV NORD Systems GmbH & Co. KG – 0045 – has performed the initial inspection of the factory and of the factory production control (and also the continuous surveillance, assessment and evaluation of the factory production control) of the production according to the System 2+ and has issued the Certificate of production control conformity.

4 Vlastnosti/*Leistung/ Performance:*

Základní charakteristiky *Wesentliche Merkmale* Essential characteristic	Vlastnost *Leistung* Performance	Harmonizované technické specifikace *Harmonisierte technische Specification* Harmonised technical specification
Svařitelnost	EN AW 6082	EN 1011-4
Křehký lom	NPD	NPD
Reakce na oheň	Třída A1	EN 13501

Vlastnosti výrobku specifikovaného v bodě 1 a 2 je ve shodě s vlastnostmi uvedenými v bodě 4. Toto prohlášení o vlastnostech se vydává na výhradní odpovědnost výrobce uvedeného v bodě 3.

Die Leistung des Produkts gemäß den Nummern 1 und 2 entspricht der eklärten Leistung nech Nummer 4. Verantwortlich für die Erstellung dieser Leistungserklärung ist allein der Hersteller gemäß Nummer 3.

The performance of the product identified in point 1 and 2 is in conformity with the declared conformity in point 4. This declaration of performance is issued under the sole responsibility of the manufacturer identified in point 3.

Podepsáno za výrobce a jeho jménem/ *Unterzeichnet für den Hersteller und im Namen des Herstellers von /* Signed for and on behalf of the manufacturer by :

ing. Vladimír Zeman, vedoucí WPK / Leiter WPK / Head FPC
Jméno a funkce / Name und Funktion / Name and function

Milos. Works better.
MILOS s.r.o.
Špindlerova 286
413 01 Roudnice n.L.
tel.:+420 416 810800
fax:+420 416 837275
IČ: 25003330, DIČ: CZ25003330
Bank. spoj.: CS a.s. 1000106389/0800
11.

Roudnice nad Labem, 29.5.2015
Místo a datum / Ort und Datum /Place and date

podpis / Unterschrift / Sign

Prohlášení o vlastnostech / Leistungserklärung /Declaration of Performance

Ref.-Nr.: 2/2014

1 **M220, M222**

2 **Příhradová konstrukce/Truss/Traverse - EN 1090-3**

3 **MILOS structural systems s.r.o.**
Špindlerova třída 286
CZ – 413 01 Roudnice nad Labem

Systém 2+

Oznámený subjekt TÜV NORD Systems GmbH & Co. KG – 0045 – provedl počáteční inspekci ve výrobním závodě a vlastního řízení výroby (a rovněž průběžný dozor, posouzení a hodnocení vlastní podnikové kontroly) podle systému 2+ a vydal Osvědčení o shodě řízení výroby.

Die notifizierte Stelle TÜV NORD Systems Gmbh & Co. KG – 0045 – hat die Erstprüfung des Werkes und der werkseigenen Produktionskontrolle (sowie die laufende Überwachung, Beurteilung und Bewertung der werkseigenen Produktionskontrolle) nach dem System 2+ vorgenommen und die Bescheinigung über die Konformität der werkseigenen Produktionskontrolle ausgestellt.

The Notified Body TÜV NORD Systems GmbH & Co. KG – 0045 – has performed the initial inspection of the factory and of the factory production control (and also the continuous surveillance, assessment and evaluation of the factory production control) of the production according to the System 2+ and has issued the Certificate of production control conformity.

4 Vlastnosti/*Leistung/ Performance:*

Základní charakteristiky *Wesentliche Merkmale* Essential characteristic	Vlastnost *Leistung* Performance	Harmonizované technické specifikace *Harmonisierte technische Specification* Harmonised technical specification
Svařitelnost	EN AW 6060	EN 1011-4
Křehký lom	NPD	NPD
Reakce na oheň	Třída A1	EN 13501

Vlastnosti výrobku specifikovaného v bodě 1 a 2 je ve shodě s vlastnostmi uvedenými v bodě 4. Toto prohlášení o vlastnostech se vydává na výhradní odpovědnost výrobce uvedeného v bodě 3.

Die Leistung des Produkts gemäß den Nummern 1 und 2 entspricht der eklärten Leistung nech Nummer 4. Verantwortlich für die Erstellung dieser Leistungserklärung ist allein der Hersteller gemäß Nummer 3.

The performance of the product identified in point 1 and 2 is in conformity with the declared conformity in point 4. This declaration of performance is issued under the sole responsibility of the manufacturer identified in point 3.

Podepsáno za výrobce a jeho jménem/ *Unterzeichnet für den Hersteller und im Namen des Herstellers von /*
Signed for and on behalf of the manufacturer by :

ing. Vladimír Zeman, vedoucí WPK / Leiter WPK / Head FPC
Jméno a funkce / Name und Funktion / Name and function

Milos. Works better.
MILOS s.r.o.
Špindlerova 286
413 01 Roudnice n.L.
tel.:+420 416 810800
fax:+420 416 837275
IČ: 25003330, DIČ: CZ25003330
Bank. spoj. CS a.s. 1000108389/0800

Roudnice nad Labem, 29.5.2015
Místo a datum / Ort und Datum /Place and date

podpis / Unterschrift / Sign

Manufacturers:

MILOS Czech Republic

Milos s.r.o.
Špindlerova 286
413 01 Roudnice nad Labem
Czech Republic

T +420 416 810 800
info@milos.cz
www.milossystems.com

MILOS China

Milos (Guangzhou) Co, Ltd
House No. 1-3, 6 Gong-Ye Road
Da-Wen Cun
Dong-Chong Zhen
Nansha District, Guangzhou

T +86 203 490 0968
info@milos.cn
www.milossystems.com

Distribution network:

Area Four Industries Headquarters

Špindlerova 286
413 01 Roudnice nad Labem
Czech Republic

T +420 416 810 800
contactus@areafourindustries.com
www.milossystems.com

Area Four Industries Germany

Johann-Krane-Weg 27
48149 Münster
Germany

T +49 251 202 4014-0
info@areafourindustries.de
www.milos-systems.de

Area Four Industries United Kingdom

Unit 5-6 Beechwood Estate
Cattle Dyke, Gorefield, Wisbech
Cambridgeshire PE13 4NR
United Kingdom

T +44 (0)1945 410 700
info@areafourindustries.co.uk
www.milossystems.co.uk

Area Four Industries America

5427 N. National Dr.
Knoxville, TN 37914
USA

T +1 800 411 0065
info@areafourindustries.us
www.milos-systems.com